بسم الله الرحمن الرحيم



ކުޅުދުއްފުށި ސިޓީ ކައުންސިލް ރިފާރު

ކުޅުދުއްފުށި، ދިވެހިރާއްޖެ

ވިލާތުލައްވާ ނަން:

ކުޅުދުއްފުށި ސިޓީ ކައުންސިލްގެ ވެލްފެއާ ޕްރޮގްރާމް ބަލައިގަންނަވާ ވަކި ފަރާތެއް
ކޮންމެވެސް ގަންސިލަރަކު ތަކެއް ހަދިޔާ ކުރުން



652 8831 info@kulhudhuffushicity.gov.mv www.kulhudhuffushicity.gov.mv @kfcitycouncil

بسم الله الرحمن الرحيم



ކުޅުދުއްފުށި ސިޓީ ކައުންސިލް
ކުޅުދުއްފުށި، ދިވެހިރާއްޖެ

ފަރުނީچަރު ކަނޑައެޅުން

ފަހަނައެޅުމުގެ ތަފްސީލު

ކުޅުދުއްފުށި ސިޓީ ކައުންސިލްގެ ބަޖެޓުގެ ތެރެއިން ދެވޭ ފަރުނީچަރު ގަނެ ހޯދުމަށް ކުރިއަށް ގެންދާ ކަންތައް ކަނޑައެޅުމަށާއި ގުޅޭ ތަފްސީލު ތިރީގައި ބަޔާންކުރެވިގެންވާ ފަރުނީچަރު ކަނޑައެޅުން ކަނޑައެޅުމަށް ކަނޑައަޅަނީ.

1. ފަރުނީچަރު ލިޔެފައި

1.1 ފަހަނައަށް ގެންނަ ފަރުނީچަރު ތަކުގެ ލިޔުން ތަކުގައި ބަޔާންކުރާ ގޮތަށް ކަނޑައެޅުން ކުރަންވާނެ. ކަނޑައެޅުމުގައި ބަލަންވާ ކަންތައް ކަނޑައެޅުމަށް ބަލަންވާ ކަންތައް

1.2 ގެނެވޭ ފަރުނީچަރު ކަނޑައެޅުމަށް ކުރިން ހަމަ ގެނެވޭ ގޮތް ބަލައި ބަލައި ބަލައި

See full pictures in **Annex 1**		▪ Metal colors: white ▪ Glide: PP· Optional lockable 2·5inch PU castors ▪ Wood top foldable· Stackable for space saving ▪ With Modesty panel, length adjustable ➢ Overall length: 1200mm ➢ Overall width: 600mm ➢ Overall height: 750mm	
Foldable chair See full pictures in **Annex 2**	160	Crafted from highly durable magnesium and fabric for a comfortable seat, and magnesium alloy legs for the toughest of lives· Quickly foldable and side stacked· With Castor-wheels· Features ▪ Light-weight and Durable Die cast Aluminium Chair Frame in Stackable design for neater environment ▪ Moulded Foam Seat with Customizable Fabric Colors ▪ Hard-wearing Nylon Castor Wheels allows Ease of Manoeuvring while Protecting Flooring Dimensions in mm Overall width: 595mm Overall Height: 870mm Floor to seat height: 465mm Castor Wheel: 3·5 inch	 

652 8831 info@kulhudhuffushicity.gov.mv www.kulhudhuffushicity.gov.mv @kfcitycouncil

		Material ▪ Die Cast Aluminium Chair Frame ▪ Fabric Foam Cushion Seat ▪ Nylon Wheel Castor Color need to be aproved	
Foldable Table With Cloth Cover, Cloths (24 PCS) See full pictures in **Annex 3**	12	▪ NBH – Folding Table ▪ Portable ▪ Brand: NBH ▪ Model: HTR150F ▪ Color: White/Grey ▪ Material: Plastic + Metal Legs ▪ Features: ▪ Seats 6 to 8 people· ▪ Easy to fold and carry with handle· ▪ Suitable for indoor or outdoor settings· ▪ Space-Saving: Folds flat for easy storage· ▪ Durable Build: Sturdy plastic top and metal legs ensure long-lasting use· ▪ Dimension: ▪ Width x Depth x Height ▪ Millimeter (mm): ▪ Dia· 1520 x H 730mm ▪ Inch (''): ▪ Dia· 59·8” x H 28·7” ▪ Feet (’) Inch (”): ▪ Dia· 5’ x H 2’5”	

652 8831 info@kulhudhuffushicity.gov.mv www.kulhudhuffushicity.gov.mv @kfcitycouncil

<table>
<tr><td></td><td></td><td>▪ Folded Dimension: W 1520 x D 760 X H 90mm (W 59·8” x D 29·9” x H 3·5”)</td><td></td></tr>
<tr><td>Coctail Table With Covering Cloths (Covering Cloths 16 PCS)

See full pictures in Annex 4</td><td>8</td><td>▪ MNI - Dining Table
▪ Brand: MNI
▪ Model: DT510
▪ Color: White
▪ Shape: Round
▪ Material: Plastic
▪ Dimension
▪ Diameter x Height
▪ Millimeter (mm):
▪ Dia· 700 x H 1050mm
▪ Inch (”):
▪ Dia· 27·6” x H 41·3”
▪ Feet (') Inch ("):
▪ Dia· 2'4" x H 3’5”</td><td> 
 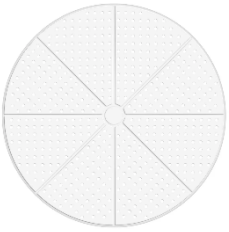 </td></tr>
<tr><td>Dutbin

See full pictures in Annex 5</td><td>4</td><td>Height 600mm
Stainless Steel
Foot Pedal
Round shape
27L</td><td>  </td></tr>
<tr><td>Interactive Flat Panel Displays (IFPs) with Stand

See full Information in Annex 6</td><td>1</td><td><table>
<tr><th>Component</th><th>Technical Parameter</th><th>Minimum Requirement Specifications</th></tr>
<tr><td>Display & Visuals</td><td>Screen Type</td><td>Direct-lit LED Backlight with Anti-Glare/Anti-Fingerprint tempered safety glass.</td></tr>
<tr><td></td><td>Display Size</td><td>98-inch diagonal minimum.</td></tr>
<tr><td></td><td>Native Resolution</td><td>3840 x 2160 (4K UHD) at a minimum refresh rate of 60Hz.</td></tr>
<tr><td></td><td>Aspect Ratio</td><td>16:9 widescreen format.</td></tr>
<tr><td></td><td>Viewing Angle</td><td>178° horizontal and vertical minimum.</td></tr>
<tr><td></td><td>Display Colors</td><td>1.07 Billion colors (10-bit) with automated ambient light brightness adjustments.</td></tr>
</table></td><td>  </td></tr>
</table>

652 8831 info@kulhudhuffushicity.gov.mv www.kulhudhuffushicity.gov.mv @kfcitycouncil

Card Holder Sofa 10 PCS **Annex 7**	10	Overall length: 1200mm Overall width: 600mm Overall height: 1050mm On seat 450mm	
120cm Long Table with Wood veneer **Annex 7**	7	Overall length: 1200mm Overall width: 600mm Overall height: 750mm	
60cm Wooden Leather Square Table **Annex 7**	10	Overall length: 600mm Overall width: 600mm Overall height: 750mm	
Single Chair **Annex 7**	15	Overall length: 450mm Overall width: 520mm Overall height: 800mm and 450mm	

652 8831 info@kulhudhuffushicity.gov.mv www.kulhudhuffushicity.gov.mv @kfcitycouncil

Ergonomic chair **Annex 8**	18	Ergonomic chair Back frame PP+ fiber, head pillow can be up and down the belt hanger Single frame cushion + imported special network 3D lifting handrail Stage 3 locking multi-functional chassis 350MM aluminum fit +60MM all-black PU wheel	 
Bean Bag	5	Color: Royal blue - Cream - Dark Orange Dimentions: 900mm*1100mm Faux linen or other fabric	

652 8831 info@kulhudhuffushicity.gov.mv www.kulhudhuffushicity.gov.mv @kfcitycouncil

velvet storage stool	10	Same as stool in Munus Hub	
Training Chair with Table Board	50	Feature: Material: stand: metal ;armrest: PP; back: mesh felt;Cushion: high density sponge;writing pad: ABS Must include: writing pad and wheels	 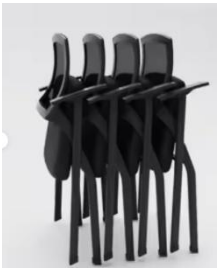 

Podium	3	Magnetic removable plate with council logo and name or sticker More information on **Annex 8**	
Powered Loudspeaker	2	**Item Type:** 2 x 10" Powered Loudspeaker (Enhanced, Monitor-Capable) **Driver Configuration:** 10" woofer + 1" compression driver **Power Output:** 1400W Class-D amplifier **Max SPL:** 127 dB peak **Frequency Response:** 52 Hz – 23 kHz (-10 dB) **DSP Voicing Modes:** Music, Live, Club, Monitor + Indoor/Outdoor settings **Monitor Features:** Dedicated Monitor voicing mode, built-in monitor wedge angle for floor monitor use **Feedback Control: Built-in Feedback Eliminator** **Channel Features:** Music Ducking (auto-reduces Ch·2 when Ch·1 receives signal) **Inputs / Outputs: Ch·1:** XLR/TRS (mic or line); Ch·2: XLR/TRS line + stereo 1/8" aux; Thru output	

652 8831 info@kulhudhuffushicity.gov.mv www.kulhudhuffushicity.gov.mv @kfcitycouncil

		Wireless Connectivity: Bluetooth playback & control, app-based speaker linking **App Support:** Companion app for EQ, voicing modes, and channel level control **Mounting:** Standard pole mount **Dimensions:** 22·4" x 13·0" x 12·8" (569 x 330 x 325 mm) **Weight:** 25·6 lb / 11·6 kg (per unit)	
Channel Digital Anti-Feedback Processor	2	Item Type: 2 x 2-Channel Digital Anti-Feedback Processor Channels: 2 Inputs/Outputs: XLR & Jack input and output per channel Operating Modes: Fixed mode (storable filters/presets), Live mode (real-time analysis and editing) Filter Precision: Extremely narrow notch filters, up to 1/80 of an octave Programmable Filters: 24 per channel Indicators: LED chain for all 24 filters per channel, LCD display Connectivity: USB port (firmware updates) Power: Internal power supply Format: 19" / 1U rack unit	

652 8831 info@kulhudhuffushicity.gov.mv www.kulhudhuffushicity.gov.mv @kfcitycouncil

HDMI Cable (High Speed)	10	**Item Type:** HDMI Cable (High Speed) **Length:** 15ft / 4·5m **Connector Type:** HDMI Type A to HDMI Type A **HDMI Version:** HDMI 2·1 Bandwidth: 48Gbps **Resolution Support:** Up to 4K@60Hz (backward compatible with 2K, 1080p, 720p) **Compatible Devices:** MacBook, iMac, Mac Mini, Apple TV, Windows laptops & desktops, Microsoft Surface, monitors, TVs, projectors, and any standard HDMI-enabled device **Audio Support:** ARC/eARC, multi-channel digital audio **Materials:** Braided nylon jacket, gold-plated connectors **Colour:** Black	
IEC C13 'Kettle' Power Cable Lead with UK Pin Plug	10	**Item Type:** IEC C13 'Kettle' Power Cable Lead with UK Pin Plug Connector Type: C13 (IEC) to UK 3-Pin Plug **Length:** 10m **Fuse Rating:** 13A **Max Power Capacity:** Up to ~2990W at 230V (within 13A fuse limit) — suitable	

652 8831 info@kulhudhuffushicity.gov.mv www.kulhudhuffushicity.gov.mv @kfcitycouncil

		for most amplifier/subwoofer power draw **Compatible Devices:** Computers, Monitors, Printers, and other electronics with a C13 inlet **Safety Features:** Moulded strain relief, safety standard compliant Construction: Premium materials for durability and reliable power transfer	
USB-C to HDMI Multiport Adapter	10	**Item Type: USB-C to HDMI Multiport Adapter** **Colour: Gray** **Ports / Interface: HDMI 2·1, USB-C (PD), USB 3·0, USB 2·0** **Compatible Devices: Laptops, Tablets, Smartphones with USB-C (Thunderbolt 3/4 compatible) — MacBook Pro/Air, iPad Pro, Chromebook, Surface Book, ·Galaxy S21/S20/S10, etc** **Charging (Power Delivery): 27W max via USB-C** **USB Data Transfer Speed: 10 Gbps (USB 3·0 / 3·1 Gen 1)** **Video Output: 4K (backward compatible with 2K, 1080p, 720p)** **Materials: Aluminum alloy** **Dimensions: 2·3" x 2·1" x 0·4" (60 x 55 x 10 mm)**	

652 8831 info@kulhudhuffushicity.gov.mv www.kulhudhuffushicity.gov.mv @kfcitycouncil

		"Cable Length: 130mm / 0.5 Weight: 0.04 kg / 0.88 oz	
Softbox	2	**Item Type:** Softbox (8-Sided Octagon Shape) **Interior Color:** Silver **Light Compatibility:** Built-In Speed Ring with Godox Mount: For Godox AD300Pro / Godox AD400Pro / Godox ML60 **Accepts Grids:** Yes (Included)	
Bi Color LED Video Light	2	**Item Type:** LED Monolight **Included Light Modifier:** Lens **Included Storage Case:** Yes **Photometrics at 3.3' / 1 m:** 3200K: 288 fc / 3100 Lux (Unmodified) Spot Beam at 3200K: 2323 fc / 25,000 Lux (with Lens) 5600K: 344 fc / 3700 Lux (Unmodified) Spot Beam at 5600K: 2750 fc / 29,600 Lux (with Lens) **Color Temperature:** 2800 to 6500K **Color Modes:** Daylight, Tungsten Color Accuracy **Standard:** CRI 96 TLCI 96 **Dimming:** App-Controlled / Built-In Dimmer 0 to 100% **Front Accessory Mount:** Proprietary	

652 8831 info@kulhudhuffushicity.gov.mv www.kulhudhuffushicity.gov.mv @kfcitycouncil

		Wireless Remote Control **Type:** Bluetooth **Power Source:** Battery (Included) USB Power (Cable Included) AC to DC Adapter (Not Included) **Battery Plate Type:** Proprietary (Built-In) **Battery:** Proprietary Rechargeable (Included) **Input Power:** 12 to 20 VDC at 1·5 to 5 A **Fixture Mounting:** 1/4"-20 Female Thread	
Air Cushioned Light Stand	2	**Stand Type:** General Purpose Stand **Height: Maximum Working** 114·2" / 290 cm **Minimum Working Height:** 48·4" / 123 cm **Load Capacit:** 22 lb / 10 kg **Stand/Column Top Mount:** 5/8" Receiver **Wheels:** Optional **Air Cushioned:** Yes **Weight:** 4·4 lb / 2 kg	
Split ND Filter Set for DJI Mavic 4 Pro (2-3 Stops)	1	**Filter Type:** Solid ND **Exposure Reduction:** 2 to 3 - Stop **Size:** Dedicated **Filter Material:** Glass	
Cooling Fan for Sony Camera	2	**Compatibility:** Sony FX3 / FC30 / ZV-E1 / ZV-1 / a7S III / a6700 / a7C / ZV-E10 / ZV-E10 II / a7 IV / a7C II	

652 8831 info@kulhudhuffushicity.gov.mv www.kulhudhuffushicity.gov.mv @kfcitycouncil

		USB I/O: 1 x USB-C (Power Only) Female Input **Power Source:** USB **DC Input Power:** 4·5 to 10·8 VDC at 1 to 2 A **Power Consumption:** 18 W (Maximum) 5 W (Typical) **Mounting:** 1x Mounting Frame (8 Options) **Color:** Black **Material of Construction:** Aluminum, ABS+PC Plastic **Operating Conditions:** 32 to 113°F / 0 to 45°C	
Micro-HDMI to HDMI Cable	1	**Interface:** HDMI 2·0 **Connector 1:** 1x Micro-HDMI Male **Connector 2:** 1x HDMI Male **Cable Length:** 13·8" / 35 cm **Active/Passive:** Passive **Maximum Resolution Support:** 3840 x 2160 at 60 Hz **Materials:** Jacket: Thermoplastic Elastomer (TPE) **Color:** Black	
COB Light	1	**Item Type:** 1x COB LED Monolight **Included Light Modifier:** 1x Reflector 1x Softbox with Removable Grid **Included Storage Case:** Yes	

		Photometrics at 3·3' / 1 m: 361 fc / 3881 Lux **Photometrics (with Reflector) at 3·3' / 1 m:** 1609 fc / 17,317 Lux **Color Temperature:** 2700 to 6500K **Color Modes:** Daylight, Tungsten **Color Accuracy Standard:** CRI 95 TLCI 97 **Dimming:** Built-In Dimmer 0 to 100% **Cooling System:** Fan **Built-In Flash:** No **Preprogrammed Effects:** No **Umbrella Mount:** Yes **Front Accessory Mount:** Proprietary Bowens S **Wireless Remote Control Type:** Bluetooth **Power Source:** AC to DC Adapter (Included) Battery (Included) USB Power (Cable Not Included) **Inputs/Outputs:** 1x Barrel / Coax Power Input 1x USB-C Power Input **Battery:** 1x Proprietary Rechargeable, 22·2 VDC, 15,600 mAh, 57·72 Wh (1x Included) **Battery Runtime:** 30-Minute Runtime at Maximum Brightness	

652 8831 info@kulhudhuffushicity.gov.mv www.kulhudhuffushicity.gov.mv @kfcitycouncil

		Battery Charge Time: 2·5-Hour Charge Time via USB-C **Battery Charging:** 1x AC to DC Adapter (Included) 1x USB-C Wall Charger (Not Included) **Input Power:** 24 VDC at 5 A 100 to 240 VAC, 50 / 60 Hz **Included Adapter / Cable:** 1x USA Type-A/B Plug to Barrel / Coax AC to DC Adapter **Power Pass-Thru:** No **Power Consumption:** 100 W (Maximum) **Fixture Mounting:** 1x 1/4"-20 Female Thread **Included Mount Adapter:** 1x Swivel Mount: 5/8" Receiver to Proprietary	
Camera Strap	2	**Item Type:** 1 x Neck/Shoulder Strap for Camera **Colour:** Black **Adjustable Strap:** Yes **Attachment Method:** To Camera: Lug Ring, Loop **Load Capacity:** 198·4 lb / 90 kg **Quick Release:** Yes **Materials:** Nylon/Polyester/Rubber **Strap Length:** 59·8" / 152 cm	

652 8831 info@kulhudhuffushicity.gov.mv www.kulhudhuffushicity.gov.mv @kfcitycouncil

		Strap Width: 1·8" / 4·5 cm **Weight:** 4·9 oz / 139 g	
SD Card	3	**Card Type:** SDXC **Storage Capacity:** 128 GB **Bus Type:** UHS-II **Speed Class:** Class 10 / U3 / V90 **Read Speed:** Maximum: 300 MB/s **Write Speed: Maximum:** 260 MB/s Minimum: 90 MB/s **Built-in Write-Protect Switch:** Yes **Operating Conditions:** 32 to 158°F / 0 to 70°C **Storage Conditions:** -13 to 185°F / -25 to 85°C	
SD Card	2	**Card Type:** SDXC **Storage Capacity:** 265GB **Bus Type:** UHS-II **Speed Class:** Class 10 / U3 / V90 **Read Speed: Maximum:** 300 MB/s **Write Speed: Maximum:** 260 **MB/s** **Minimum:** 90 MB/s **Built-in Write-Protect Switch:** Yes **Operating Conditions:** 32 to 158°F / 0 to 70°C **Storage Conditions:** -13 to 185°F / -25 to 85°C	
Closed Back Audio Monitor	2	**Wearing Style:** Dual Ear with Headband **Foldable:** Yes **Earpiece Swivel:** Yes **Open/Closed-Back:** Closed-Back **Impedance:** 38 Ohms	

652 8831 info@kulhudhuffushicity.gov.mv www.kulhudhuffushicity.gov.mv @kfcitycouncil

		Active Noise Cancellation: No **Frequency Response:** 15 Hz to 28 kHz **Built-In Mic:** No **Audio Connector:** 1x 1/8" / 3·5 mm TRS **Included Adapter:** 1/4" TRS **Wearing Style:** Dual Ear with Headband **Foldable:** Yes **Earpiece Swivel:** Yes **Earpiece Design:** Over-Ear (Circumaural) **Open/Closed-Back:** Closed-Back **Sound Field:** Stereo **Driver Type:** Dynamic **Driver Size:** 1·8" / 45 mm **Impedance:** 38 Ohms **Active Noise Cancellation:** No **Frequency Response:** 15 Hz to 28 kHz **Sensitivity:** 99 dB **Maximum Power Handling:** 1600 mW **Built-In Controls:** No **Wired Audio Connector:** 1x 1/8" / 3·5 mm TRS **Included Adapter:** 1/4" TRS **Connector Plating:** Gold **Cable Design:** Detachable / Straight **Cable Length:** 9·8' / 3 m, 3·9' / 1·2 m	
Lens Cap	1	**Type:** Front **Size:** 82 mm **Attachment Method:** Snap-On	

652 8831 info@kulhudhuffushicity.gov.mv www.kulhudhuffushicity.gov.mv @kfcitycouncil

SD Card Reader	3	**Media Card Reader:** 1x SDXC (UHS-II “312 MB/s”) 1x microSDXC (UHS-II “312 MB/s”) **Host Connection:** USB-C 3·1/3·2 Gen 2 via Detachable Cable **Power Source:** Bus Powered **Operating Conditions:** 32 to 104°F / 0 to 40°C up to 95% Humidity **Storage Conditions:** -4 to 185°F / -20 to 85°C up to 95% Humidity **Enclosure Material:** Aluminum **Dimensions:** 4·1 x 2·3 x 0·5" / 103·4 x 57·7 x 12 mm	
Charger for Godox V860III-S (Charger Model VC26 Battery Charger)	1	**Model:** Godox VC26 USB Battery Charger **Type:** USB Battery Charger **Purpose:** Flash Battery Charging **Compatible Batteries:** VB26, VB26A, VB26B (Li-ion) **Compatible Flash Models:** Godox V1S, V1C, V1N, V1F, V1O, V1P, V1Pro, V860III, V860III-C, V860III-N, V860III-S, V860III-O, V860III-F, V850III, AD100PRO **Input:** DC 5V 2·0A **Output:** DC 8·4V 1A **Interface:** Type-C **Indicator:** LED Status Indicator (Charging Status)	

652 8831 info@kulhudhuffushicity.gov.mv www.kulhudhuffushicity.gov.mv @kfcitycouncil

		Charging Cable: USB charging cable not included (requires separate cable) **Power Source:** USB Power Adapter (5V 2·0A required)	
Clip-on Wireless Microphone	1	Wireless Technology: Digital 2·4 GHz Diversity: Non-Diversity Max Operating Range: 1115·5' / 340 m (Line of Sight) Receiver Type: 1x Camera-Mount 1x Plug-In (USB-C) Number of Audio Channels: 4 Included Transmitters: 2x Clip-On Microphone Type: 2x Built-In (Clip-On Transmitter) Included Charging Case: Yes, with Integrated Battery RF Frequency Band: 2400 MHz Max Transmitters per Band: 4 Latency: 20 ms (Maximum) Encryption: No Built-In Recorder: Yes (on Transmitter via Built-In Storage) Timecode Support: Yes Receiver Mounting Options: Shoe-Mount (with Included Hardware) Receiver Antenna: 2x Internal Receiver Audio I/O: 1x 1/8" / 3·5 mm TRS Unbalanced Line Output 1x 1/8" / 3·5 mm TRS Headphone Output USB/Lightning Connectivity: 1x USB-C Male	

652 8831 info@kulhudhuffushicity.gov.mv www.kulhudhuffushicity.gov.mv @kfcitycouncil

		Receiver Frequency Response: 20 Hz to 20 kHz **Receiver Display: LCD (Non-Backlit)** **Receiver Power Requirements: Battery, Bus Power (USB)** **Transmitter Antenna: Internal** **Transmitter Input Level:** Microphone **Transmitter Audio I/O:** No **Transmitter USB I/O:** No **Transmitter Muting:** Off/On Switch **Transmitter Auto-Level/Gain:** Yes **Transmitter Frequency Response:** 20 Hz to 20 kHz **Transmitter Sync Method:** 2·4 GHz QPSK **Transmitter Display:** No **Microphone Polar Pattern:** Omnidirectional **Microphone Frequency Response:** 20 Hz to 20 kHz **Microphone Maximum SPL:** 128 dB **Microphone Sensitivity:** -37 dBV **Microphone Color:** Gray **Receiver Battery Type:** 1x Built-In Rechargeable **Receiver Battery Life:** 12 Hours **Transmitter Battery Type:** 1x Built-In Rechargeable **Transmitter Battery Life:** 11 Hours **Battery Charging Time:** 1·5 Hours Charging Case Additional **Runtime:** 36 Hours **Charging Case Battery:** 2000 mAh Rechargeable **Charging Input:** USB-C	

652 8831 info@kulhudhuffushicity.gov.mv www.kulhudhuffushicity.gov.mv @kfcitycouncil

		AC/DC Power Adapter: No **Environmental Resistance:** No **Receiver Dimensions:** 2·1 x 1·2 x 0·9" / 54·2 x 29·5 x 22·3 mm 1·6 x 1·1 x 0·4" / 40·7 x 27 x 9·1 mm **Transmitter Dimensions:** 1·8 x 0·9 x 0·4" / 45·1 x 23·4 x 10·2 mm **Receiver Weight:** 0·8 oz / 24 g 0·2 oz / 5·9 g **Transmitter Weight:** 0·5 oz / 14 g	

1 ފޮޓޯ











ژئرژاسۆ 2



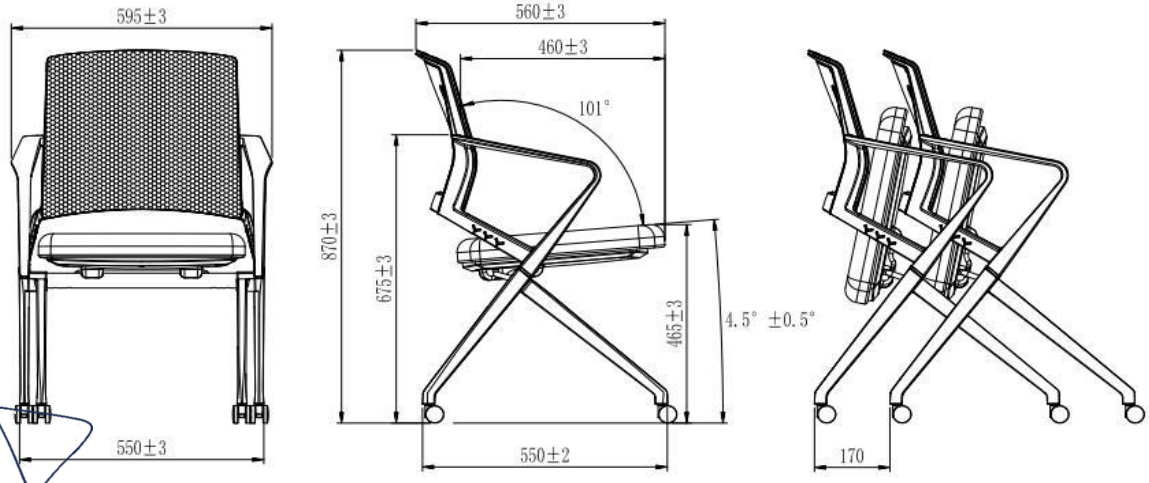

652 8831 info@kulhudhuffushicity.gov.mv www.kulhudhuffushicity.gov.mv @kfcitycouncil

ژەنگۆلاسە 3





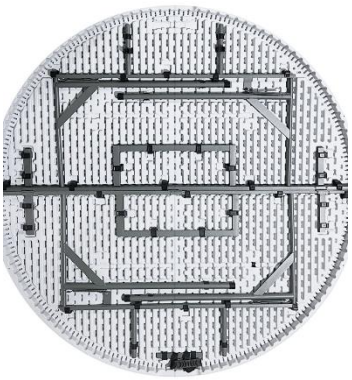

ژەنگۆلاسە 4

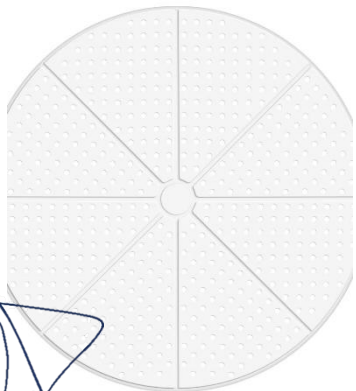



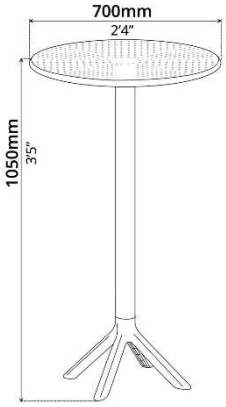

652 8831 info@kulhudhuffushicity.gov.mv www.kulhudhuffushicity.gov.mv @kfcitycouncil

ފޮޓޯ 5





652 8831 info@kulhudhuffushicity.gov.mv www.kulhudhuffushicity.gov.mv @kfcitycouncil

Core Interactive Flat Panel Specifications

Component	Technical Parameter	Minimum Requirement Specifications
Display & Visuals	Screen Type	Direct-lit LED Backlight with Anti-Glare/Anti-Fingerprint tempered safety glass.
	Display Size	98-inch diagonal minimum.
	Native Resolution	3840 x 2160 (4K UHD) at a minimum refresh rate of 60Hz.
	Aspect Ratio	16:9 widescreen format.
	Viewing Angle	178° horizontal and vertical minimum.
	Display Colors	1.07 Billion colors (10-bit) with automated ambient light brightness adjustments.
Touch Mechanics	Sensing Technology	High-precision Infrared (IR) sensing framework.
	Touch Points	Minimum 40 to 50 simultaneous touch points supporting multi-user collaboration.
	Writing Interface	Supports dual-color recognition, gesture erasing (palm erase), finger writing, smart charts, flowcharts, and instant whiteboard launching via integrated NFC tap module.
Core Hardware	Processor (CPU)	Flagship 8-Core configuration (Quad-core ARM Cortex-A73 + Quad-core ARM Cortex-A53 framework).
	System Memory	8GB DDR4 RAM minimum.
	Storage	128GB high-speed flash storage (ROM) minimum.
	Operating System	Android version 13.0 or higher.
	Ecosystem Licensing	**MANDATORY REQUIREMENT: Google Enterprise Devices Licensing Alliance (EDLA) Certified.** Panel must run a native Google Enterprise UI out of the box with official, unrestricted access to the **Google Play Store**, native **Google Workspace apps** (Drive, Docs, Sheets, Meet, Chrome), and full **Google Workspace Admin Console** centralized cloud device management integration.

652 8831 info@kulhudhuffushicity.gov.mv www.kulhudhuffushicity.gov.mv @kfcitycouncil

Audio & Video	Built-in Camera	Integrated top-mounted 48MP Ultra HD AI Video Conferencing Camera featuring Auto-Framing, face-detection, and a minimum 102° distortion-free wide-angle lens.
	Microphone Array	Integrated 8-array microphone built into the touch frame; 12-meter sound pickup range, 180° wide-angle capture, AI background noise reduction, and Echo-Free full-duplex dual talk capabilities.
	Speaker System	Integrated multi-driver high-fidelity stereo soundbar system with a minimum combined output of 60W (featuring 2x 20W Front Speakers paired with an integrated 20W Low-Frequency Subwoofer).
Connectivity	Audio/Video Inputs	HDMI 2.0 In x 3 minimum, VGA In x 1, Audio In x 1.
	Audio/Video Outputs	HDMI Out x 1, Audio Out / Earphone x 1, Digital Optical SPDIF Out x 1.
	Data & Touch Interface	USB 3.0 x 4 minimum, Type-C (Full-Function supporting 4K Video, Audio, Touch-back, and minimum 65W Power Delivery) x 1, USB Touch-Back type-B ports x 2.
	Network	Dual-Band Wi-Fi (Wi-Fi 6 supported), Bluetooth version 5.3 minimum, and Gigabit Ethernet RJ45 Lan ports (In/Out switch hub functionality).

652 8831 info@kulhudhuffushicity.gov.mv www.kulhudhuffushicity.gov.mv @kfcitycouncil

ژُرنَرژُرسُو 7



652 8831 info@kulhudhuffushicity.gov.mv www.kulhudhuffushicity.gov.mv @kfcitycouncil



652 8831 info@kulhudhuffushicity.gov.mv www.kulhudhuffushicity.gov.mv @kfcitycouncil

Item: Intelligent Multimedia Lectern with Pro-Audio Conversion Bridge

Section	Specification Requirement
1. General Description	Mobile, highly integrated intelligent digital lectern with an industrial-grade touchscreen interface, internal high-performance computing, and motorized ergonomics. Must interface seamlessly with an external large-format LED display wall and an existing analog house sound system via an included professional digital-to-analog USB isolation interface.
2.1 Display & Touch Screen	• Minimum 27-inch diagonal active matrix display. • Native 4K Ultra High Definition (UHD) 3840 x 2160 pixels. • High-precision capacitive touch glass supporting a minimum of 20 simultaneous touch points. • Full lamination process, 10-bit color depth (min 1.07B colors), 178° viewing angles, and a fixed 20° panel operating angle. • Rated backlight lifetime of at least 30,000 operational hours.
2.2 Computing & OS	• Flagship 64-bit Octa-Core processor (4 high-performance cores / 4 high-efficiency cores). • Neural processing unit (NPU) delivering a minimum of 6 TOPS of computing power. • Minimum 8GB system RAM paired with at least 64GB internal solid-state flash storage. • Secure enterprise-grade Android 12 ecosystem (or equivalent proprietary platform OS) optimized for whiteboard tools, document markup, voting functions, and file management. • Integrated high-speed Wi-Fi and Bluetooth wireless modules.
2.3 Structure & Ergonomics	• High-durability commercial-grade metallic construction with a clean, minimalist aesthetic. • Motorized intelligent lifting column adjusting between a minimum height of 1130mm and a maximum height of 1326mm via single-click control. • Integrated smooth-glide multi-directional mobile casters built into the base. • Built-in folding utility tray and an integrated upper document receptacle.

652 8831 info@kulhudhuffushicity.gov.mv www.kulhudhuffushicity.gov.mv @kfcitycouncil

3.1 Physical Interface Ports	• Upper Panel (Connector Group 1): Min 2 x USB 3.0 Type-A high-speed ports, 1 x HDMI Video Input port, and 1 x Full-function USB Type-C port. • Lower Base (Connector Group 2): Min 1 x HDMI Video Output port, 1 x USB Type-C data port, and 1 x RJ45 Gigabit Ethernet LAN port.
3.2 Audio Input & Control	• 1 x Detachable matched pair of gooseneck condenser pickup microphones mounting securely into the top panel frame. • Hardware-level dedicated physical or touch-capacitive microphone mute button integrated on the workspace panel.
4. Standard System Accessories	• Screen Mirroring Suite: 1 x High-definition hardware screen mirroring device with its dedicated receiver head for plug-and-play, lag-free wireless audio/video broadcasting. • Input Tools: 1 x Precision digital writing pen or stylus compatible with the capacitive display. • Cabling: 1 x Power adapter suited to local voltage requirements, and 1 x 5-meter high-speed HDMI cable.
5. Mandatory Pro-Audio Bridge	• Interface Type: Class-compliant, high-resolution Stereo USB Digital-to-Analog Converter (DAC) Direct Box (DI Box). • OS Compatibility: Driverless plug-and-play operability natively recognized by the Android operating system over USB. • Power: Powered directly over USB connection from the lectern base Type-C port; no external power supply required. • Analog Outputs: Dual (Left and Right) low-impedance, balanced male XLR outputs capable of driving line-level sound signals up to 100 meters without loss. • Electrical Isolation: Built-in high-performance physical audio isolation transformers to shield from electromagnetic interference. • Manual Controls: Physical Ground-Lift switch, built-in mono-summing switch, and a variable analog output level control knob. • Build Quality: Rugged, heavy-duty 14-gauge steel enclosure for continuous commercial presentation environments.

652 8831 info@kulhudhuffushicity.gov.mv www.kulhudhuffushicity.gov.mv @kfcitycouncil